Be ahead

BUILDING
ACCESS AUTOMATION

Empowered by
U-LINK

ARES ULTRA BT A

ARES ULTRA BT A

ee link
24 V
er ready
d-track
U-Link

Empowered by
U-LINK

24 V sliding gates operator for intensive use,up to 1500 Kg in weight. Leaf speed up to 9 m/min. Magnetic limit switch and control board with U-link protocol embedded

ARES ULTRA BT A

U-Link d-track er ready ee link 24 V

Code	Name		Description	
P926194 00001	ARES ULTRA BT A1000 V.120	new	Operator 24 V for sliding gates up to 500 kg in weight. Leaf speed 12 m/min.	U-Link
P926193 00001	ARES ULTRA BT A1000 120	new	Operator 24 V for sliding gates up to 1000 kg in weight. Leaf speed 9 m/min.	U-Link
P926192 00001	ARES ULTRA BT A1500 V.120	new	Operator 24 V for sliding gates up to 750 kg in weight. Leaf speed 12 m/min.	U-Link
P926191 00001	ARES ULTRA BT A1500 120	new	Operator 24 V for sliding gates up to 1500 kg in weight. Leaf speed 9 m/min.	U-Link

ADVANTAGES

Simplified and intuitive wiring: the new Merak control units have standardised terminal blocks with different colours depending on the input and output function blocks for maximum ease of connection of operators and accessories.

Obstacle recognition: the D-Track torque management and control system ensures maximum safety for people and property, as well as facilitating certification of the system.

Interconnectivity: the Merak control unit is native to U-link protocol for control of the operator via Bluetooth, 485 serial network or TCP-IP network

PLUS

Magnetic limit switches: this type of limit switch ensures safe and precise installations in any ambient condition

Control unit with programming display: the Merak control unit with programming display with pre-programmed scenarios helps the installer in the programming phase; the control unit is arranged in an oblique way, to facilitate reading and making the settings.

Front screws: this arrangement of the casing screws offers ease and convenience during installation and maintenance, even when there is limited space.

Release lever with personalised key: the release lever simplifies motor release and the personalized key ensures its uniqueness, for better safety

ARES ULTRA BT A

MERAK C-U-MERAK Built-In

Incorporated control unit for one 24V operator for sliding gates

- Incorporated control unit for one 24V operator for sliding gates
- Board power supply: 230V single-phase
- Operator power supply: 24V 80W
- Main characteristics: removable terminal boards withe new colour standard,simplified programming with scenario display, integrated two-channel receiver, D-Track based antisquashing system and slowdown during opening or closing.
- Main functions;: automatic closing, quick closing, pedestrian passage, people-present operation, maintenance warnings.
- Compatibility: HQSC-D, QSC-D MA

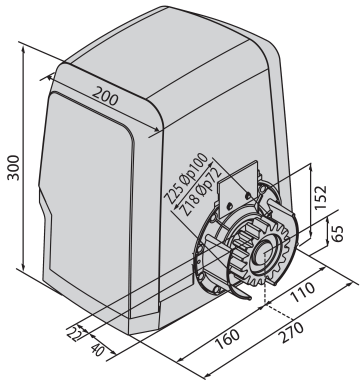

	ARES ULTRA BT A1000 V.120	ARES ULTRA BT A1000 120	ARES ULTRA BT A1500 V.120	ARES ULTRA BT A1500 120
Control unit	MERAK			
Max Leaf	500 kg	1000 kg	750 kg	1500 kg
Power supply	24 V			
Power input	240 W		400 W	
Pinion module	4			
Slowdown	yes			
Locking	mechanical			
Release	lever-operated with personal key			
Frequency of use	intensive			
Environmental conditions	from -20 °C to 55 °C			
Protection rating	IP44			
Actuator weight	7 kg			
Impact reaction	d-track			

	Code	Name	Description
	D221073	**CP**	Plastic rack, 4-module, cross-section 22 x 22 mm, length 1 m, screw-fitted into slots Portata massima 600 Kg.
	N999320	**CVZ-S**	Steel rack, 4-module, cross-section 30 x 8 mm, length 1 m, screw-fitted on supports (supplied) Portata massima 800 kg.
	D571053	**CVZ**	Steel rack, 4-module, cross-section 30 x 12 mm, length 1 m, screw-fitted on supports (supplied) Portata massima 2000 Kg.
	D571054	**CFZ**	Galvanized steel rack for welding, 22x22 mm, 4-module, cross-section from 2 m Portata massima 1000 kg.
	D111904	**MITTO B RCB02 R1**	Transmitter with 2 channels. Range 50/100 m. Power supply 12 V with 1 battery type 23 A
	P121016	**RB**	4-channel wall-mounted radio control with rolling code
	N190104	**BIR C**	Rubber safety edge (H 30 mm), price per m
	N190040	**CSP 20**	Rubber shock absorber profile length 2000 mm
	D113748 00003	**RADIUS B LTA 24 R1**	Flashing light with incorporated antenna for motors with power supply 24 V.
	D113749 00003	**RADIUS B LTA 24 R2**	Flashing light without incorporated antenna for motors with power supply 24 V.
	P123026	**B 00 R01**	Metal guard for B LTA
	P123025	**B 00 R02**	Wall mounting for B LTA series flashing beacons
	P111531	**B EBA BLUE ENTRY ANDROID 4** new	BLUE-TOOTH expansion card for Blue Entry system. Manages up to 4 smartphones with the Android operating system
	P111468	**B EBA RS 485 LINK**	Expansion board for connection of central units with serial controls management
	P111467	**B EBA WIE DRIVER**	Expansion card for connection of WIEGAND accessories, compatible with U-Link control units

	Code	Name		Description
	P903018	**PHP**	new	Pair of aluminium posts for THEA/DESME series photocells Height 522 mm
	P111527	**DESME A15 O**	new	Pair of photocells adjustable 40 ° horizontally and 10 ° vertically. IR signal synchronised to prevent any risk of blinding. Range 30 m. Power supply 24 V ac/dc.
	P111526	**DESME A15**	new	Pair of self-aligning photocells. Range 30 m. Power supply 24 V ac/dc. Pair of self-aligning photocells. Range 30 m. Power supply 24 V ac/dc.
	P111528	**THEA A15 O.PF**	new	Pair of adjustable photocells with integrated flashing light. Possibility of directing the beam 40 ° horizontally and 10 ° vertically. IR signal synchronised to prevent any risk of blinding. Range 30 m. Power supply 24 V ac/dc. For external application.
	P121025	**Q.BO PAD**	new	Vandalproof outdoor digital button panel. Metal structure and s/steel buttons. Compatible with WIEGAND protocol, it ensures maximum system safety as it does not directly control gate opening.
	P121024	**Q.BO TOUCH**	new	Wireless digital touchpad with 433MHz rolling code operation. Manages up to 10 channels and 100 codes.
	P121022	**Q.BO KEY WM**	new	Key selector for outdoor use with double contact.
	P121023	**Q.BO KEY WM AV**	new	Vandalproof key selector with double contact, for outdoor use. Metal structure. Vandalproof key selector with metal structure.
	P125035	**SL BAT2**	new	Emergency battery kit for Deimos BT A, Ares BT A, Deimos Ultra BT A, Ares Ultra BT A.
	P125018	**THEKE B PRA 01**		Metal protection box for ARES and ICARO series sliding operators

What is U-Link?

The innovative technology that gives you new power

An exclusive Bft innovation: U-Link (Universal Link) is an exclusive Bft platform that allows the creation of technological ecosystems. In Home Automation Access, it allows communication with all the home access automation devices of any brand. So you save time and can control everything with ease, without any worries.

It is intuitive
Easy to install and use

It is scalable
Allows an unlimited number of devices to be added

It is flexible
Allows the creation of groups of interconnected products

It is practical
Works with or without a web connection

It is functional
Parameters can be controlled remotely via dedicated applications

All in one scheme: discover this amazing technology

A unique platform allowing the creation of technological ecosystems offering a wide range of solutions for different sectors.

Thanks to the **B-Eba** cards and the **Clonix U-Link receiver, this proprietary platform featured by Bft products adapts to any protocol and access automation product** (even BFT, non-native U-Link or non-BFT products), and **is used in various sectors**. Each device thus becomes smart and can be interconnected with other systems, thanks to a language that becomes universal.

U-Base 2

Software to install and easily and comfortably carry out maintenance and identify any malfunction of U-link compatible operators.

U-SDK

U-Sdk is the innovative application that can make Bft automation systems compatible and easily integrated with a BMS network for the supervision of buildings.

Magistro

An innovative and easy to install system for easily managing all home automation systems.

U-Control

U-Control is the application that helps the quick and easy integration of BFT automation systems in large building management systems.

Blue-Entry

Technology abreast of the times and attentive to daily needs: thanks to the use of U-link the house gate can now be opened with just your smartphone.

Clonix U-Link

Allows the connection of non-native U-Link products or non-Bft products to U-Link systems.

Bft operators, non-native U-Link products or a product belonging to other brands: can they be connected to U-Link? Yes, thanks to the Clonix receivers. Accessories that know no limits.

B-eba

A direct line with your operators.

B-eba expansion cards allow the connection of external devices, such as PCs, smartphones and tablets, to a Bft operator or Clonix receiver, or the connection of several Bft products in a U-Link network. These accessories integrate with U-Link technology and Bluetooth, Z-Wave, TCP/IP protocols, as well as the RS485 serial connection.
A device that fully translates what Bft means for interconnectivity.

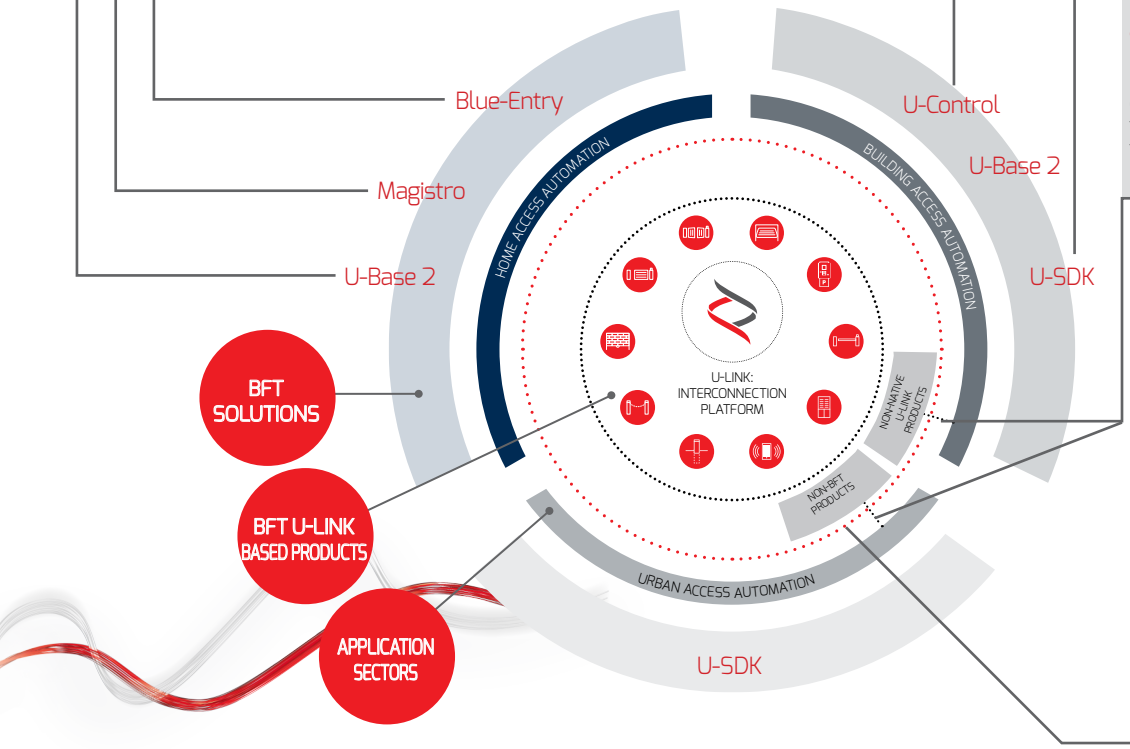

HOME
ACCESS AUTOMATION

BUILDING
ACCESS AUTOMATION

URBAN
ACCESS AUTOMATION

INFORMATION REGARDING THE PROTECTION OF THE INDUSTRIAL AND INTELLECTUAL PROPERTY RIGHTS OF BFT. BFT S.p.A. protects its industrial property by depositing trademarks, patents, models and designs. The intellectual property of BFT S.p.A. is protected by copyright law. BFT S.p.A. also protects its know-how by taking measures to protect the technical and commercial information inherent in its company and products. All the products in this catalogue are ORIGINAL BFT MODELS and only BFT S.p.A is authorised to produce them and market them anywhere in the world. All the commercial names in this catalogue are owned by BFT S.p.A., and only BFT S.p.A. is authorised to use them in relation to the corresponding merchandise category. FALSIFIERS WILL BE PROCEEDED AGAINST IN ACCORDANCE WITH BOTH CIVIL AND CRIMINAL LAW. THESE CONDITIONS NOT ONLY GUARANTEE THE INTELLECTUAL PROPERTY RIGHTS OF BFT, BUT ALSO PROTECT CUSTOMERS BY GUARANTEEING THAT THE PRODUCTS THEY ARE PURCHASING ARE ORIGINAL BFT PRODUCTS RESULTING FROM STUDIES AND DESIGNS WITHIN THE BFT COMPANY.